Barley twist cutter

Fraise à canneler

BTC3-12

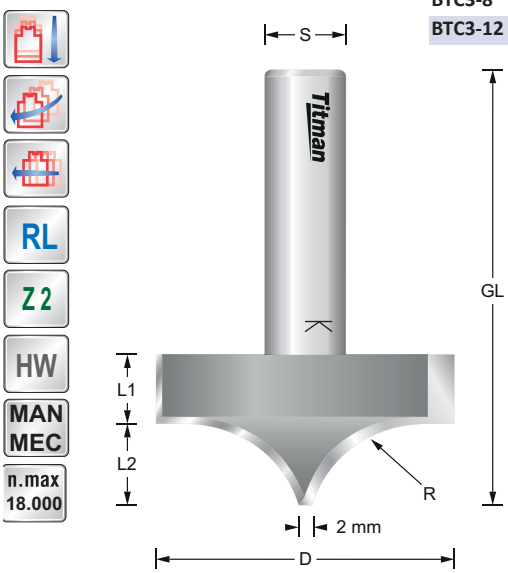

REF.	D mm	R mm	L1 mm	L2 mm	GL mm	S mm	EUR/1
BTC3-8	44	18	10	12	54	8	119,96 €
BTC3-12	44	18	10	12	64	12	119,96 €

BTC3-8

BTC4-12

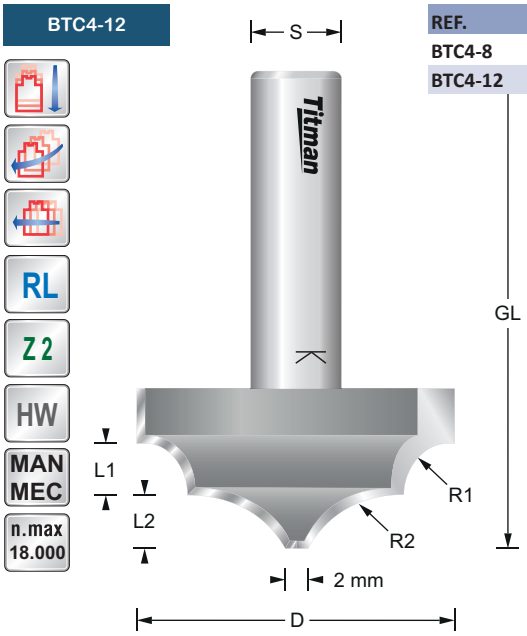

REF.	D mm	R1 mm	R2 mm	L1 mm	L2 mm	GL mm	S mm	EUR/1
BTC4-8	41.5	6	15	6	7	50	8	119,96 €
BTC4-12	41.5	6	15	6	7	60	12	119,96 €

BTC4-8

BTC6-12

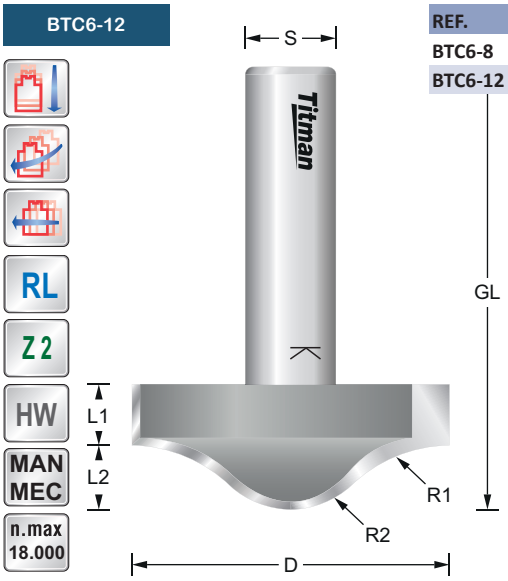

REF.	D mm	R1 mm	R2 mm	L1 mm	L2 mm	GL mm	S mm	EUR/1
BTC6-8	41.5	19	11	8	8.5	48.5	8	119,96 €
BTC6-12	41.5	19	11	8	8.5	58.5	12	119,96 €

BTC6-8